DFRC-2100

desiccant rotor air dehumidifier

technical data

Process/Dry Air Flow	15.000	m^3/h
Available Pressure For Ducting	800	Pa
Reactivation Air Flow	4.500	m^3/h
Available Pressure For Ducting	200	Pa
Nominal Drying Capacity (*)	106,2	kg/h
Total Power Supply	181	Kw
Motors Power	20,6	Kw
Reactivation Heater Power	162	Kw
Nominal current	288,0	A
Electrical Supply	400V ±5%/III/50Hz	

capacity diagram (*)

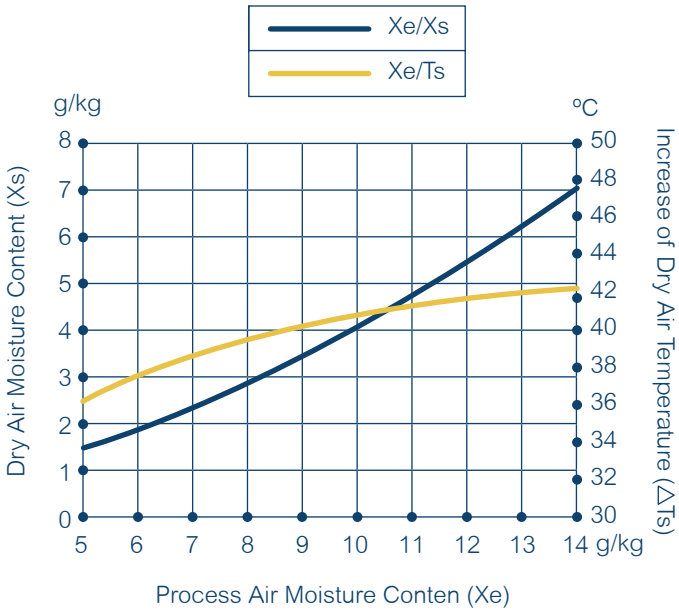

Settled Parameters:

- Process/Reactivation Air Temperature: 20 ºC
- ΔT Reactivation Heater According To Nominal Power
- Equal Process/Reactivation Air Moisture Content
- Patm: 101325 Pa

percentage variation table at different operationg conditions (*)

T (ºC) H.R. (%)	5	10	15	20	25	30	35
40	25	38	57	73	90	105	110
50	35	46	70	87	105	120	125
60	40	60	78	100	120	125	135
70	50	68	90	100	130	135	145
80	56	75	95	120	135	140	-
95	62	80	105	130	140	145	-

(*) Nominal capacity: 20ºC and 60% R.H. At other operating conditions please, ask for the correponding performaces.

specification

Air dehumidifier by high performance desiccant silicagel rotary element, brand FISAIR, model DFRC-2100:

- Enclosure in galvanized sheet steel with phosphating primer and enamel finish according to RAL 7035 resistance corrosion C4 according to PN-EN ISO 12944-6: 2001. (On request, execution in AISI 304 stainless steel).
- Rotor reactivation air heater by means of armored electrical resistances in stainless tube with thermostat operational and safety.
- Single-ear centrifugal fans with forward blades of direct transmission or indirect according to model made of galvanized steel (optionally in stainless steel).
- Air flow regulation dampers made of aluminum and galvanized sheet. (Otionally in stainless steel).
- Filters type V. with filter element classified G4 (EN 779: 2012) Coarse 60% (ISO 16890).
- Electrical panel with general disconnector, protections and operation of the electrical components.
- Operating voltage 24 VAC.
- Storaging ambient temperature. -10°C to 60°C.
- Operating ambient temperature. -10°C a 50°C
- Degree of protection of casing (according to IEC60529) IP55

overall dimensions

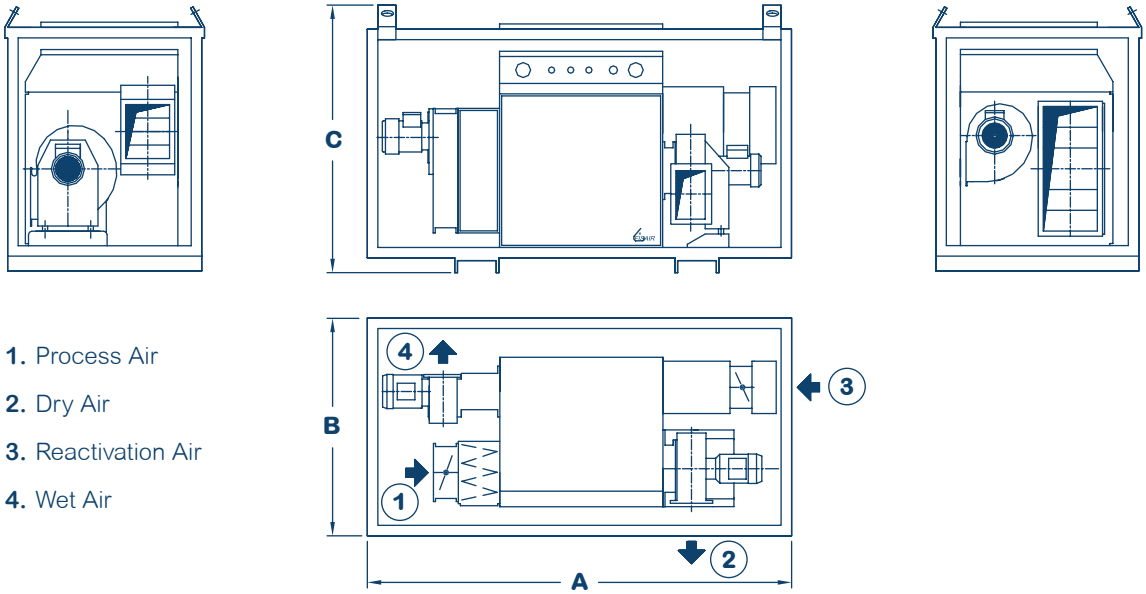

1. Process Air
2. Dry Air
3. Reactivation Air
4. Wet Air

				Air Inlet Flanges (LxH)		Air Outlet Flanges (LxH)		
DFRC	**A**	**B**	**C**	**1**	**3**	**2**	**4**	Aprox. Weight (kg)
2100	3300	2000	2220	600x1514	600x714	410x600	228x280	1820

All dimensions in mm.